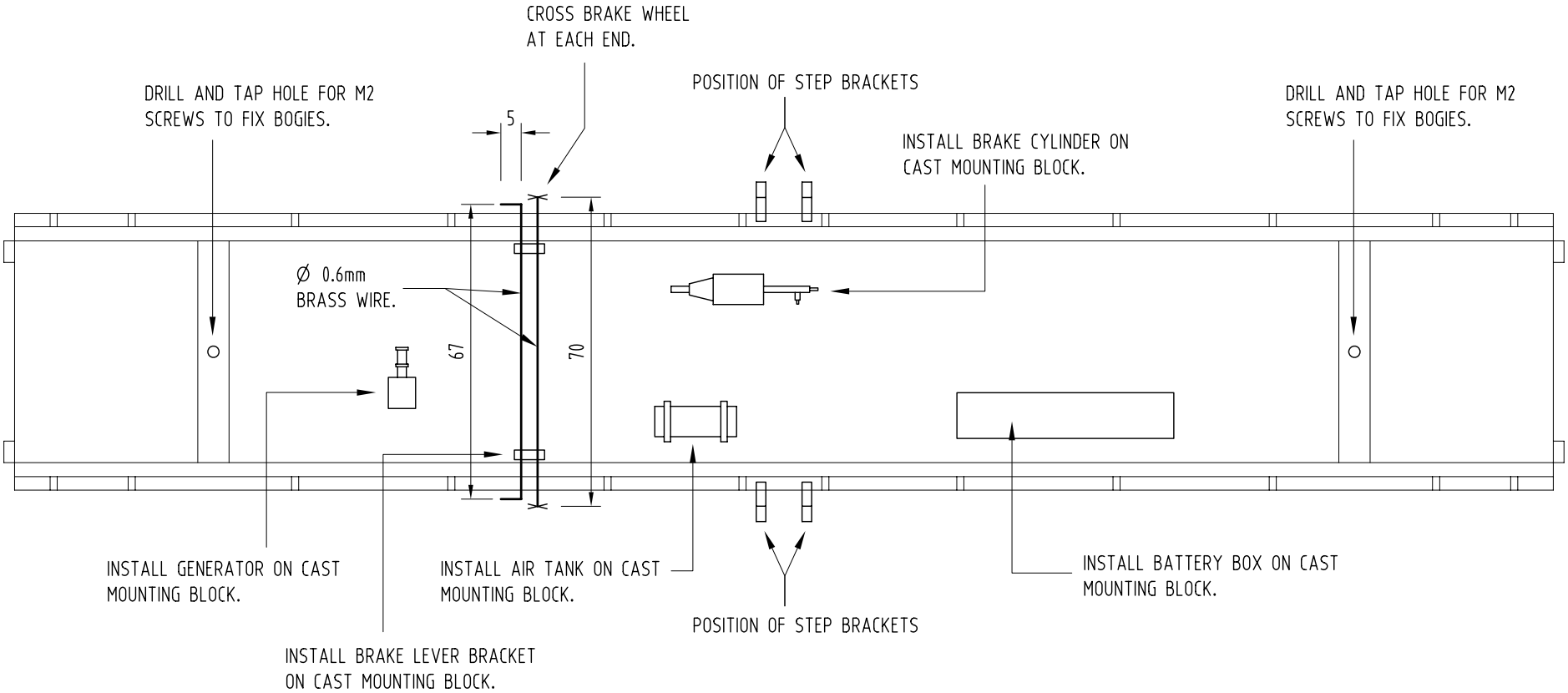

FIGURE 13 - UNDERFRAME

AS VIEWED FROM UNDERNEATH

NOT TO SCALE